Spare Parts

Alfa Laval SB Micro Sample Port

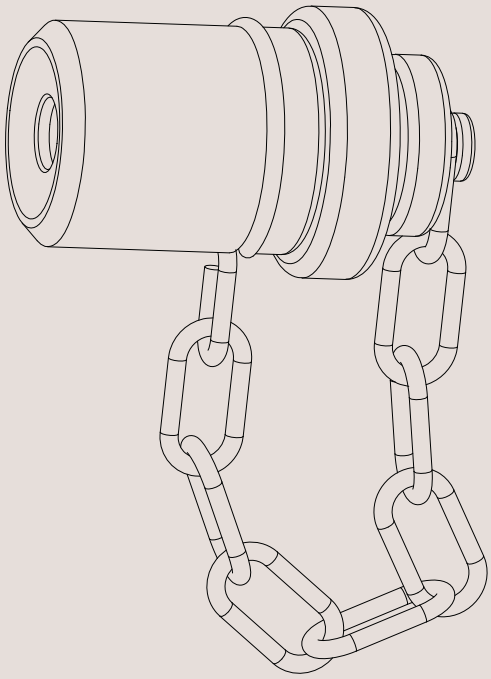

ESE02902-EN1 2015-04

Original manual

Table of contents

The information herein is correct at the time of issue but may be subject to change without prior notice

1. SB Micro Sample Port, Manual 4

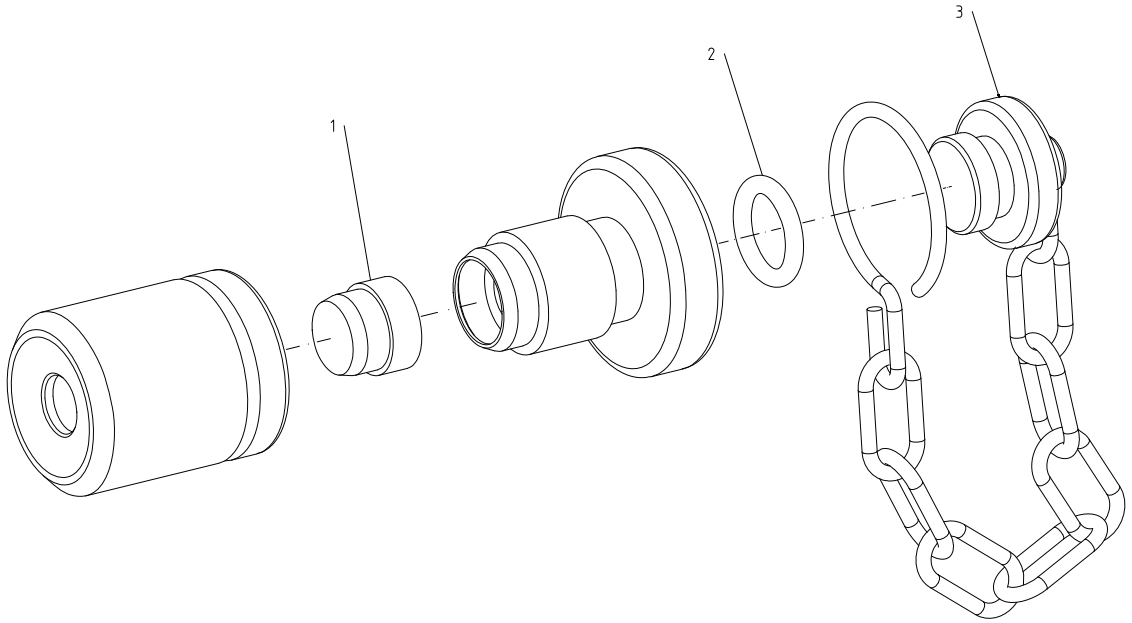
1
2
3

Pos	Qty	Denomination	
1	1	Rubber plug, Q 100PCS	9680125522
1	1	Rubber plug, NR 100PCS	9680125521
2	1	O-ring, NBR	9611992881
3	1	Plug with chain (incl. Pos. 2)	9615228301

How to contact Alfa Laval
Contact details for all countries are
continually updated on our website.
Please visit www.alfalaval.com to access the information directly.

© Alfa Laval Corporate AB
This document and its contents is owned by Alfa Laval Corporate AB and protected by laws governing intellectual property and thereto related rights. It is the responsibility of the user of this document to comply with all applicable intellectual property laws. Without limiting any rights related to this document, no part of this document may be copied, reproduced or transmitted in any form or by any means (electronic, mechanical, photocopying, recording, or otherwise), or for any purpose, without the expressed permission of Alfa Laval Corporate AB. Alfa Laval Corporate AB will enforce its rights related to this document to the fullest extent of the law, including the seeking of criminal prosecution.