Instruction Manual

Unique 7000 Flo-Diversion Valve

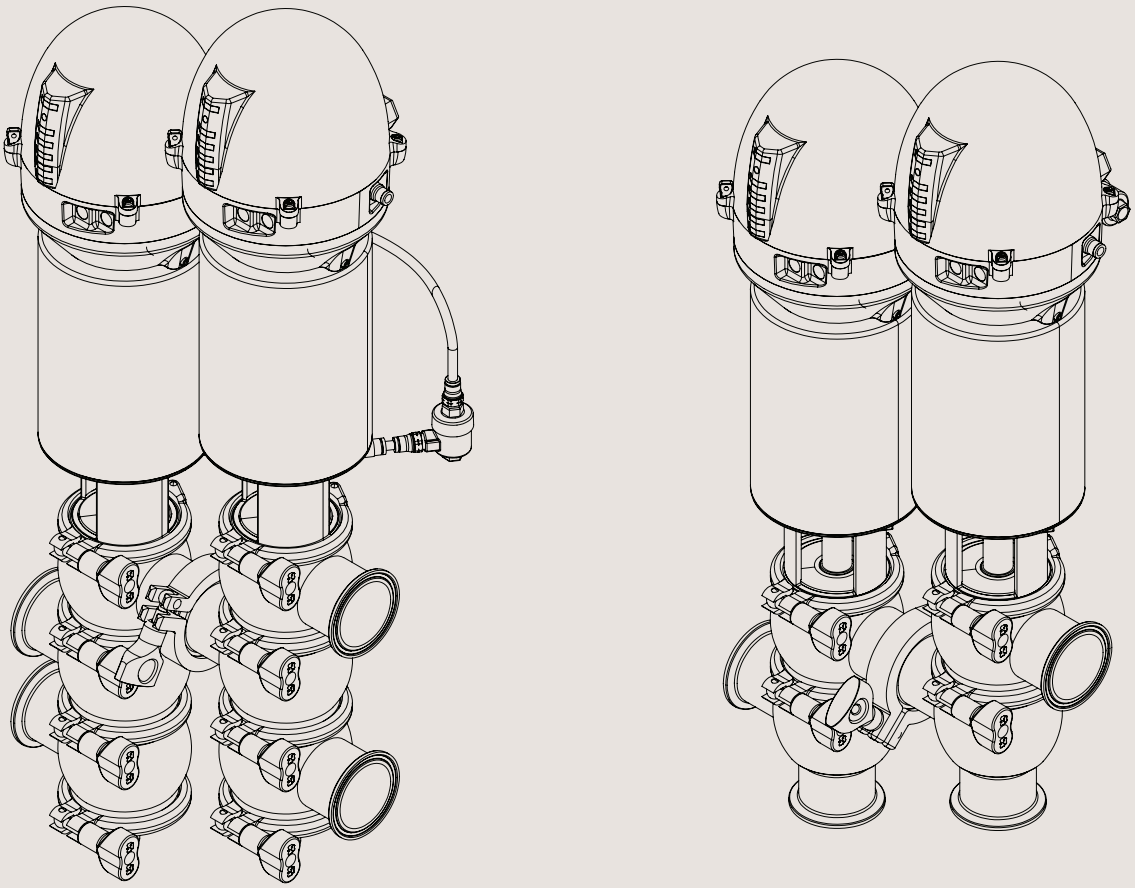

2017-02

Tri-Clover®

Table of contents

The information herein is correct at the time of issue but may be subject to change without prior notice.

Thank you for purchasing an Alfa Laval Product!

This manual contains installation, operation, and repair instructions, Flo-Diversion Valves designed and manufactured by Alfa Laval Inc. It also provides a troubleshooting chart to assist in determining electrical and mechanical malfunctions, if they should occur.

READ THIS MANUAL carefully to learn how to service and reconfigure these valves. Failure to do so could result in personal injury or equipment damage.

All warnings in the manual are summarized on this page.

Pay special attention to the instructions below so that severe personal injury and/or damange to the valve are avoided.

Installation

- **Always** read the technical data thoroughly.
- **Always** release compressed air after use.
- **Never** touch the moving parts if the actuator is supplied with compressed air.
- **Never** touch the valve or the pipeline when processing hot liquids or when sterilizing.
- **Never** dismantle the valve with valve and pipelines under pressure
- **Never** dismantle the valve when it is hot

Operation

- **Never** dismantle the valve with valve and pipelines under pressure.
- **Never** dismantle the valve when it is hot.
- **Always** read the technical data thoroughly.
- **Always** release compressed air after use.
- **Never** touch the valve or the pipelinees when processing hot liquids or when sterilizing.
- **Never** touch the moving parts if the actuator is supplied with compressed air.
- **Always** rinse well with clean water after the cleaning.
- **Always** handle lye and acid with great care.

Maintenance

- **Always** read the technical data thoroughly.
- **Always** release compressed air after use.
- **Never** service the valve when it is hot.
- **Never** service the valve with valve and pipelines under pressure.
- **Never** stick your fingers through the valve ports if the actuator is supplied with compressed air.
- **Never** touch the moving parts if the actuator is supplied with compressed air.

Valve Assembly Nomenclature

Models: 7640, 7650 (optional reverse-acting tangential)

Sizes: Std. valve 1½", 2", 2½", 3"
RA 2", 2½", 3", 4"

Features: Design based on U7000 Series valve.

Control top available with or without solenoid valves.

Available with either TR2 or elastomer seat rings. RA valve, elastomer seat only.

Fully maintainable.

Use valves with existing control panel or new Alfa Laval PLC control panel.

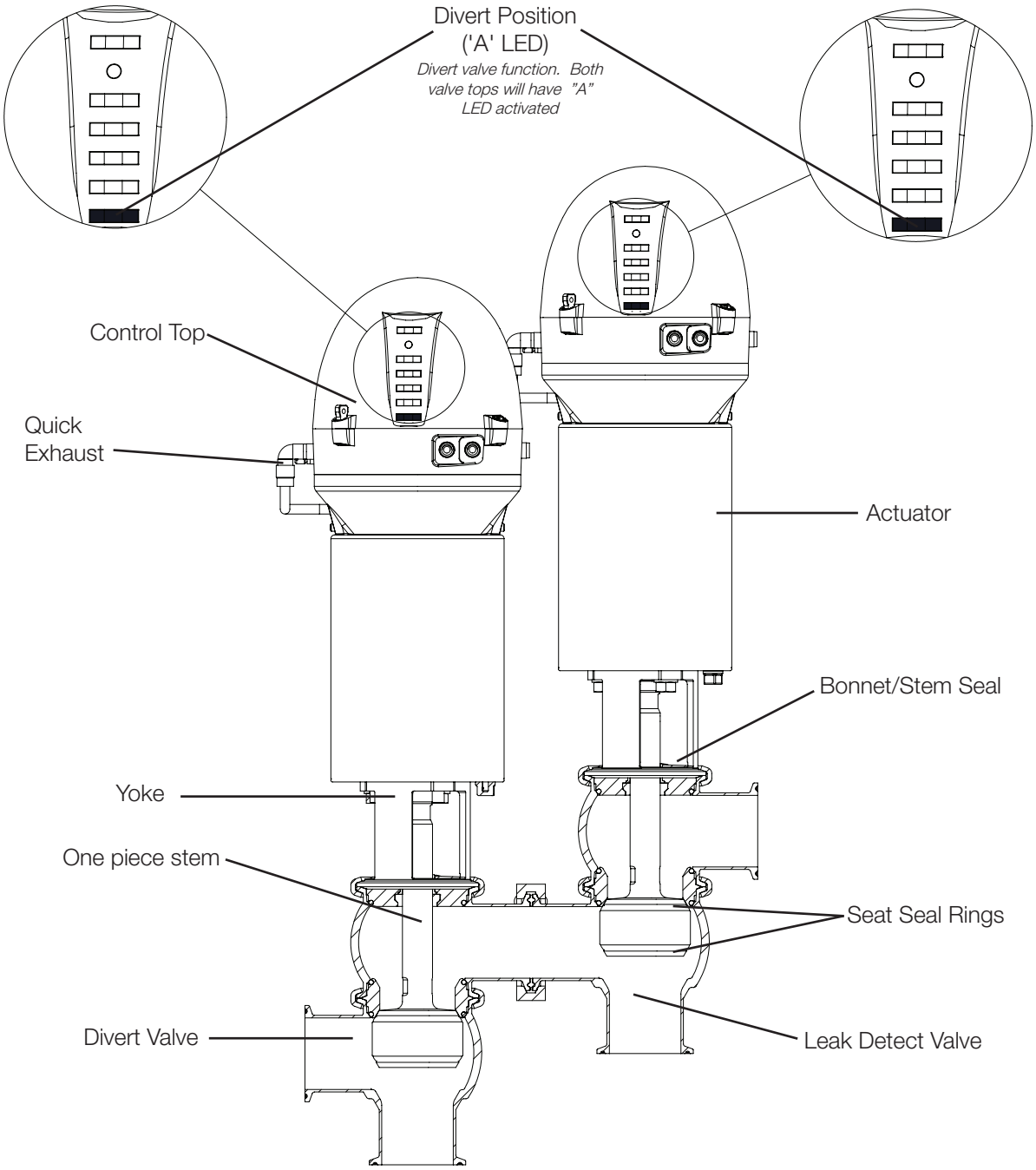

Actuator Specifications

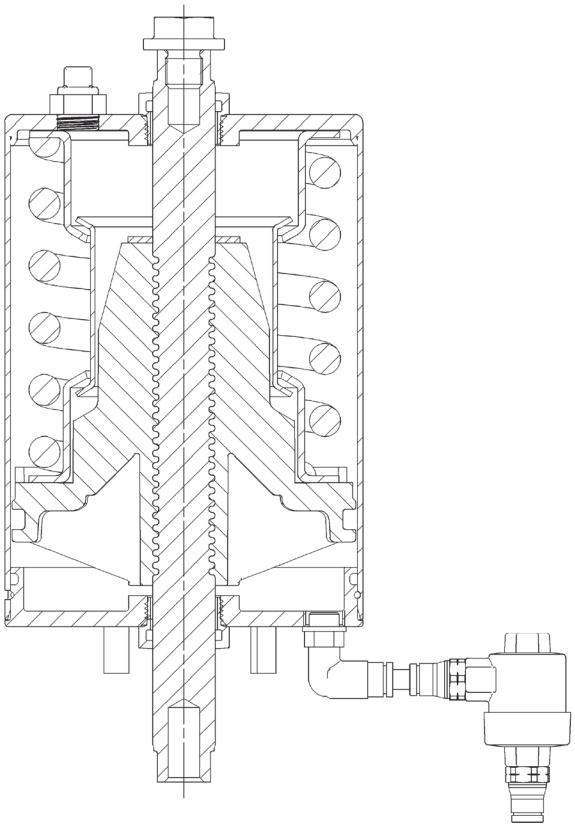

Reverse-Acting Valve
pneumatic movement upwards

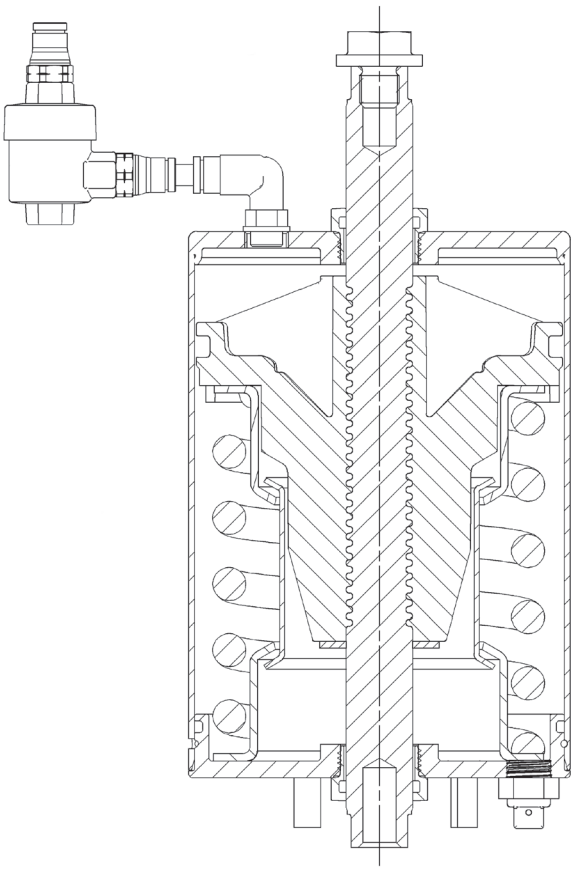

Standard Valve
pneumatic movement downward

Air Supply Requirements

Minimum Air Pressure: 70 PSI

Air Presure Range: 70-100 PSI

Air Volume Required:

Air Consumption (In3 Free air) for one stroke			
Valve Size	**1" - 1½"**	**2" - 2½"**	**3" - 4"**
NO and NC	0.96 x air pressure (PSI)	2.17 x air pressure (PSI)	5.51 x air pressure (PSI)

Performance and Dimensions

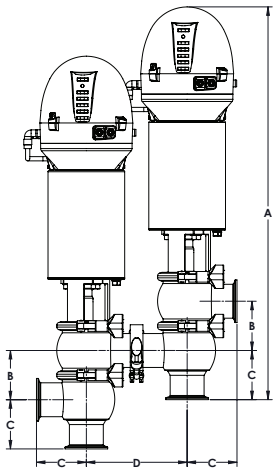

Valve Size	1½"	2"	2½"	3"
A	20.78	22.8	24.32	26.13
B	2.39	2.91	3.4	3.89
C	2.95	2.94	3.73	3.93
D	5.96	5.94	7.52	7.92
Stroke	.067	0.87	0.87	1.06

Pressure/Capacity Limits

Performance Unique 7640 Valves

Valve size	Max. Product pressure (PSI)	Required air supply (PSI)	Maximum Flow Rates
1½"		87	50 GPM
2"	125	87	85 GPM
2½"	100	87	160 GPM
3"	100	87	200 GPM

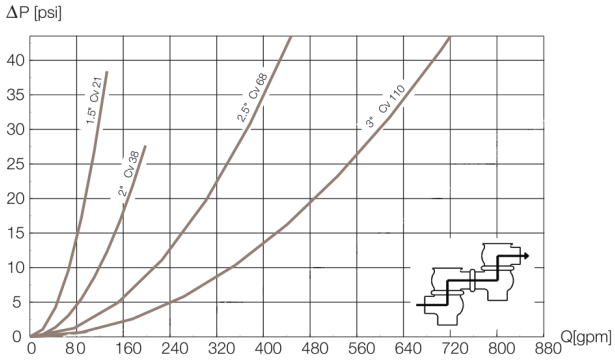

Note!

For the diagram the following applies:

Medium: Water (68°F).

Measurement: In accordance with VDI 2173.

Performance and Dimensions Reverse-Acting

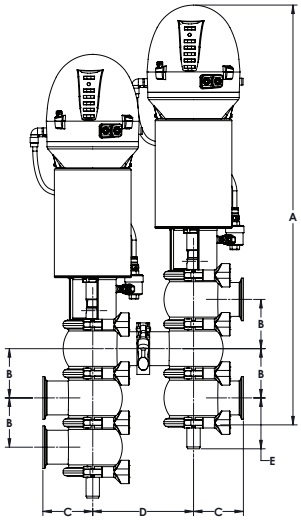

Valve Size	2"	2½"	3"	4"
A	22.8	24.32	26.13	31.1
B	2.91	3.4	3.89	4.87
C	2.94	3.73	3.93	4.72
D	5.94	7.52	7.92	10.76
E Stem Up	51.1	56.9	63.5	76.7
E Stem Down	76.1	81.9	93.5	106.7
Stroke	0.87	0.87	1.06	1.06

Pressure/Capacity Limits

Performance Unique 7640 Valves

Valve size	Max. Product pressure (PSI)	Required air supply (PSI)	Maximum Flow Rates
2"	125	87	85 GPM
2½"	100	87	160 GPM
3"	100	87	250 GPM
4"	45	87	485 GPM

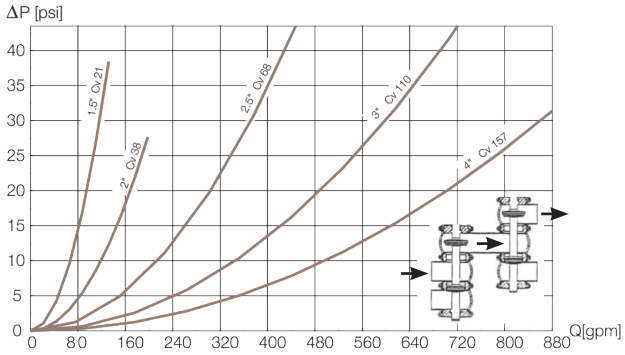

Note!

For the diagram the following applies:

Medium: Water (68°F).

Measurement: In accordance with VDI 2173.

Unpacking Equipment

The Flo-Diversion Valve should be unpacked immediately upon receipt from the factory and carefully inspected for damage that may have occurred during shipping. The equipment should also be checked against the bill of lading to make sure there are no shortages. Any damage or shortage should be immediately reported to the carrier.

Location of Equipment

The valves are mounted directly into the product line, and in close proximity to the press and balance tank. Care should be taken, however, to locate the valves in a place where they are easily reached for maintenance and disassembly.

The control panel should be located near the valves, and positioned so it can be easily reached for changing the selector switch position, manual diversion, and when necessary, and for service of the electrical components if malfunctions should occur.

Easy access to the valve and panel is necessary for operator and regulatory agency testing. If valves are not accessible from the floor, and appropriate fixed platform may be required by state and federal regulators.

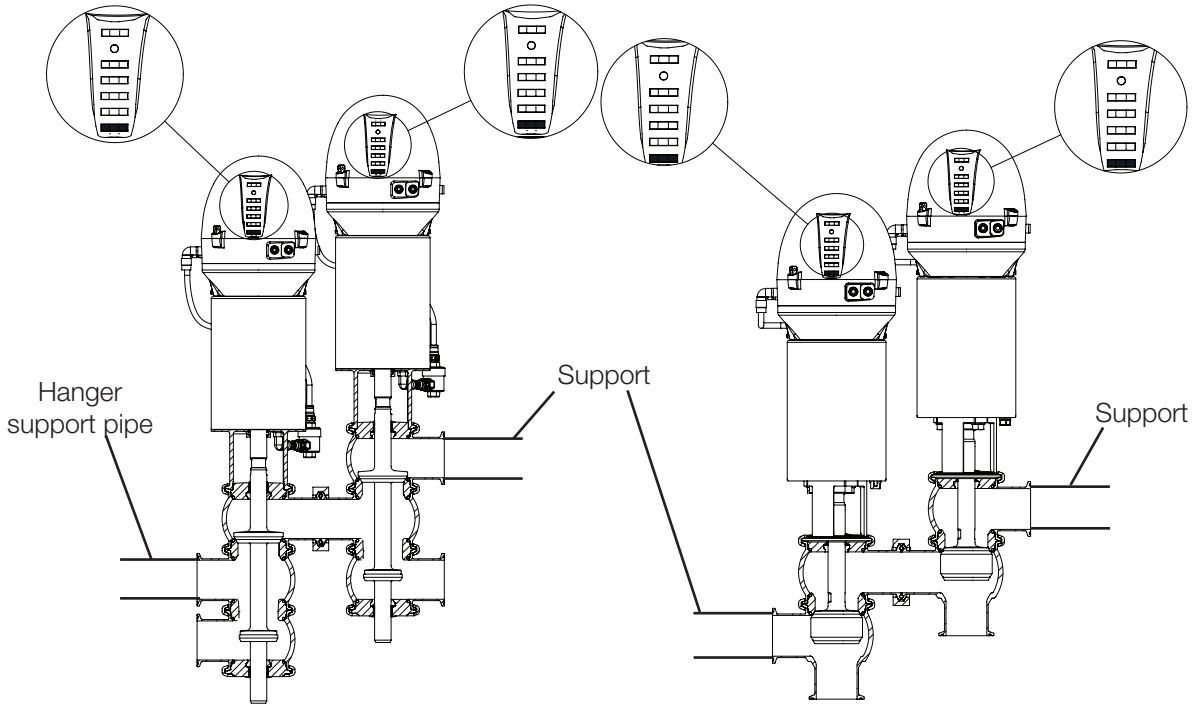

Installing the Equipment

Secure the valves to an adequate support, and connect the valves to the product piping. The valves are furnished with Tri-Clamp® fittings for simplified connections. Make sure the piping is self-supporting and that the joints at the valves are properly aligned to prevent strain on the valves.

Remove ThinkTops from their boxes and install on the valve actuators per installation instruction in ThinkTop manual section. Make air connections as described on page 12. ThinkTops have been programmed at the factory prior to shipment. Confirm set up with test procedures descrcibed in tihs manual.

Air Supply

Connect a clean dry air supply. All air connections should be made with ¼ OD poly-flo tubing or equivalent. Black or galvanized pipe is not recommended. Before making final connections blow out all air lines to remove scale, metal fillings or other extraneous particles.

Make sure that the air lines are connected to the proper valves. Quick couplers are not acceptable as air connection joints.

See air connections (next page) for valves with the solenoids in the ThinkTops. For valves with the solenoids at the panel, the air lines will connect directly to the quick exhaust valve.

Pneumatic Connections with Solenoid in-top

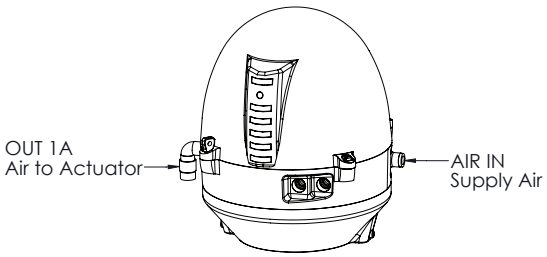

With Solenoid in Top

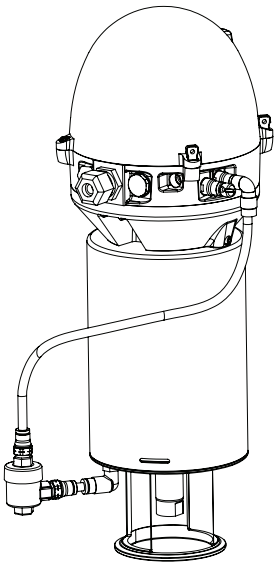

Normally Closed
RA with Solenoid in Top

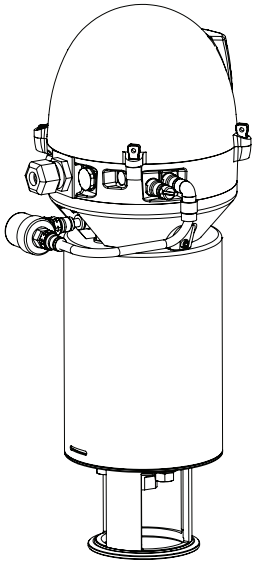

Normally Open
STD with Solenoid in Top

Pneumatic Connections with External Solenoid

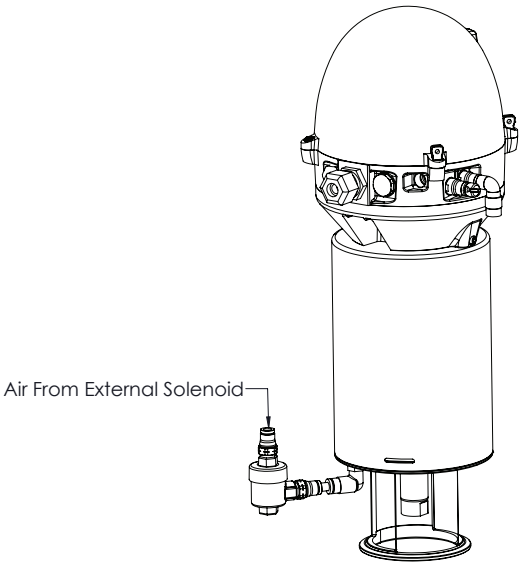

Normally Closed
RA with External Solenoid

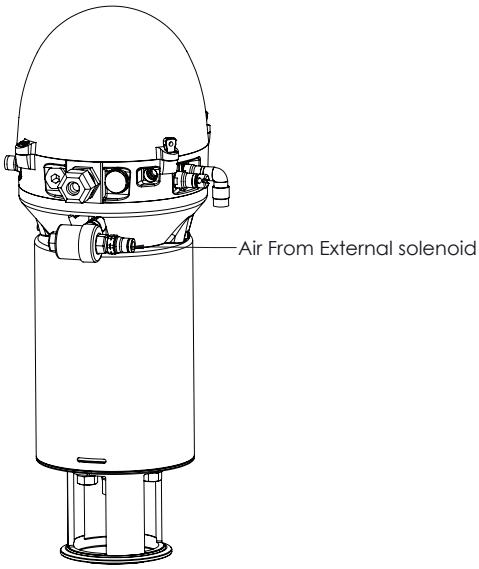

Normally Open
STD with External Solenoids

Electrical connection, internal

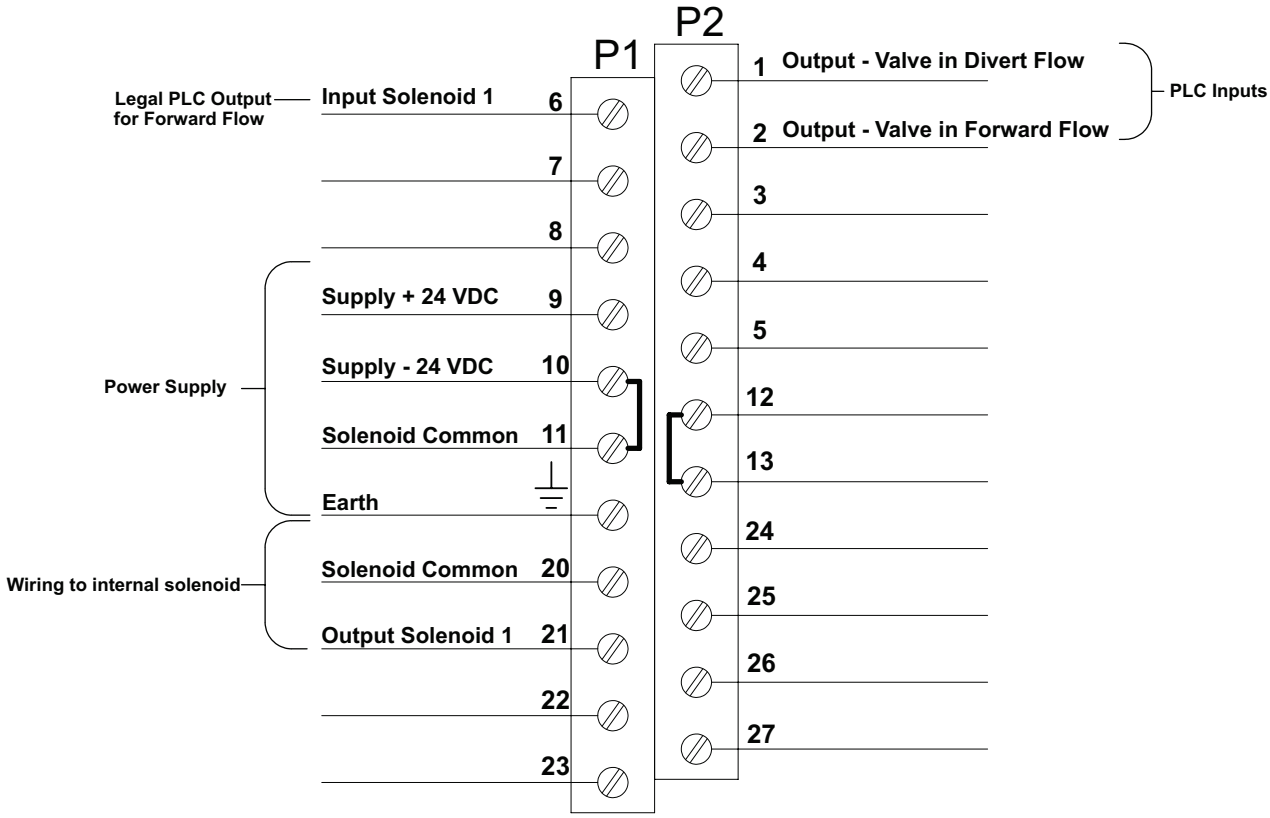

Note: Terminals 6, 11, 20 and 21 are not used if Think Top was puchased without internal solenoid

Air connections
Valves with solenoid in ThinkTop

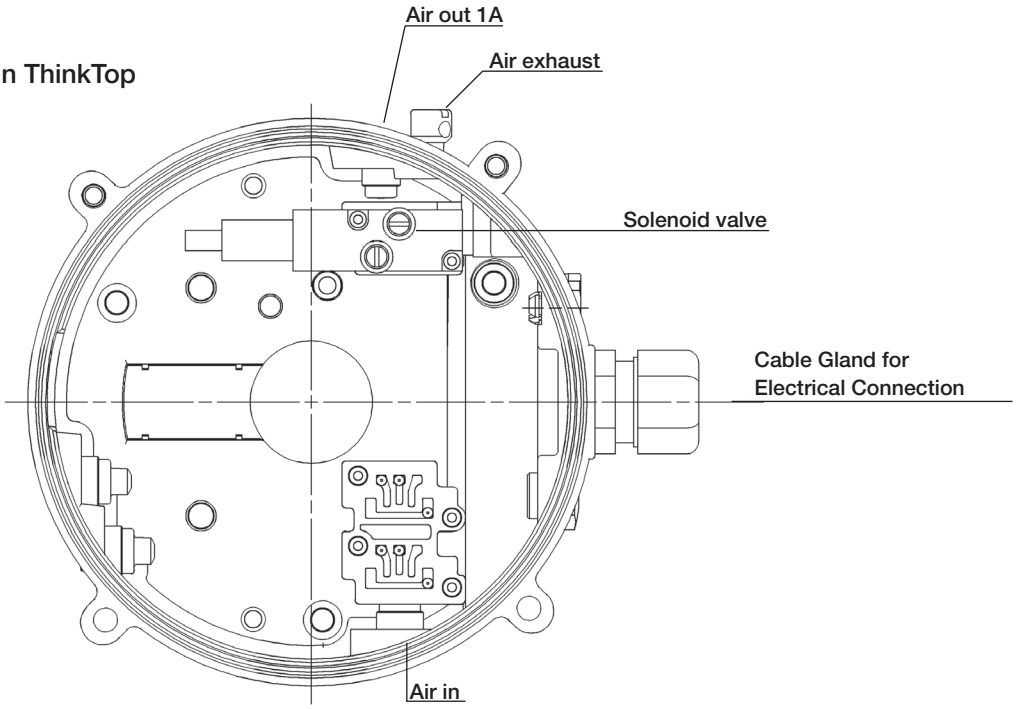

Operating Modes

The Flow Diversion device consists of two (2) valves. Each is a two-position, three-way valve connected by a common body. This common body is the upper body of the Divert Valve and the middle body of the Leak Detect Valve. The air-to-raise actuators of the two valves are connected to independent air supplies which cycle the valves to the three operating modes; Divert, Flush and Forward Flow. A description of the three modes follows:

Divert Mode

Divert is the first mode of operation assumed by the Flow Diversion Valve in the start-up procedure. Until a legal product temperature is reached and normal system operation is established, the product is diverted to the Balance Tank. Stem position can be seen by checking the valve stem in the open yoke portion of the valve.

The Divert Valve should be in the divert position when:

1. The control panel selector switch is in the Divert Position
2. The control panel selector switch is in the "off" position.
3. The power supply is interrupted.
4. The air supply is interrupted.
5. Timing pump off
6. If meter base timing system (MBTS) equals non legal flow condition
7. If temperature is below the STRL cut in set point

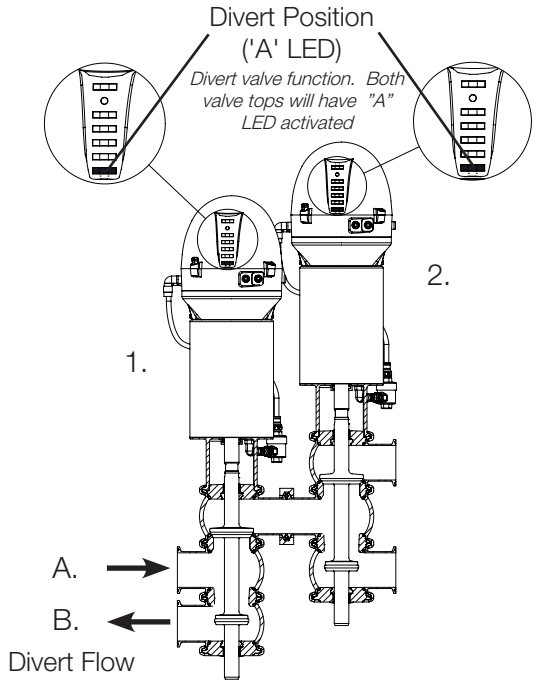

Reverse-Acting

1. Divert Valve
2. Leak Detect Valve

A. Product Inlet

B. To Balance Tank

C. Stems Lowered

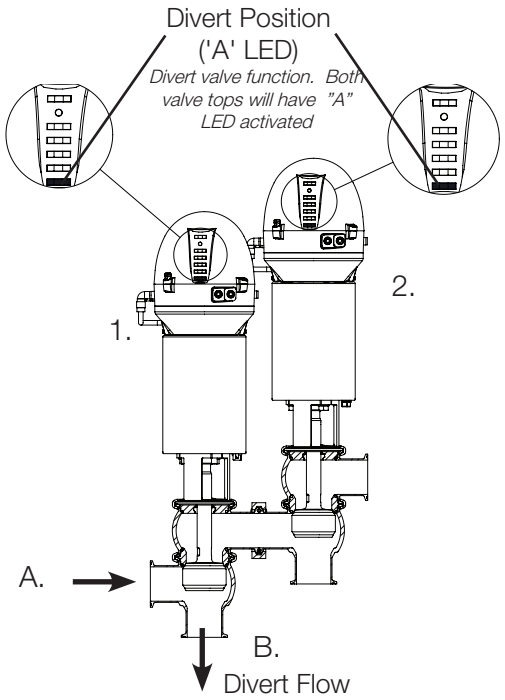

Standard Valve

1. Divert Valve
2. Leak Detect Valve

A. Product Inlet

B. To Balance Tank

C. Stems Raised

Flush Mode

In this mode, correctly pasteurized product flushes and clears the common body between the Divert Valve and the Leak Detect Valve, prior to initiating product Forward Flow.

The flush time is controlled by a Flow Divert Valve controller. This control system is separate from the Divert and Leak Detect Valves, but works in conjunction with them. The control system can be from several sources and of several designs but must be approved by the FDA prior to use.

Product that flows through the valves in the Flush mode is returned to the Balance Tank through the Leak Detect Valve and the Return Line. This line must be separate from the Divert Product Return Line, but both of these lines return the product to the Balance Tank.

The valve stems will be in the position as shown in below. Note: ThinkTop LED activated.

NOTE: The Divert and Leak Detect valves are not considered self draining, so the "FLUSH MODE" position must be held for not less than 1 second, no more than 5 seconds per PMO, before the valves are placed in the full forward flow position.

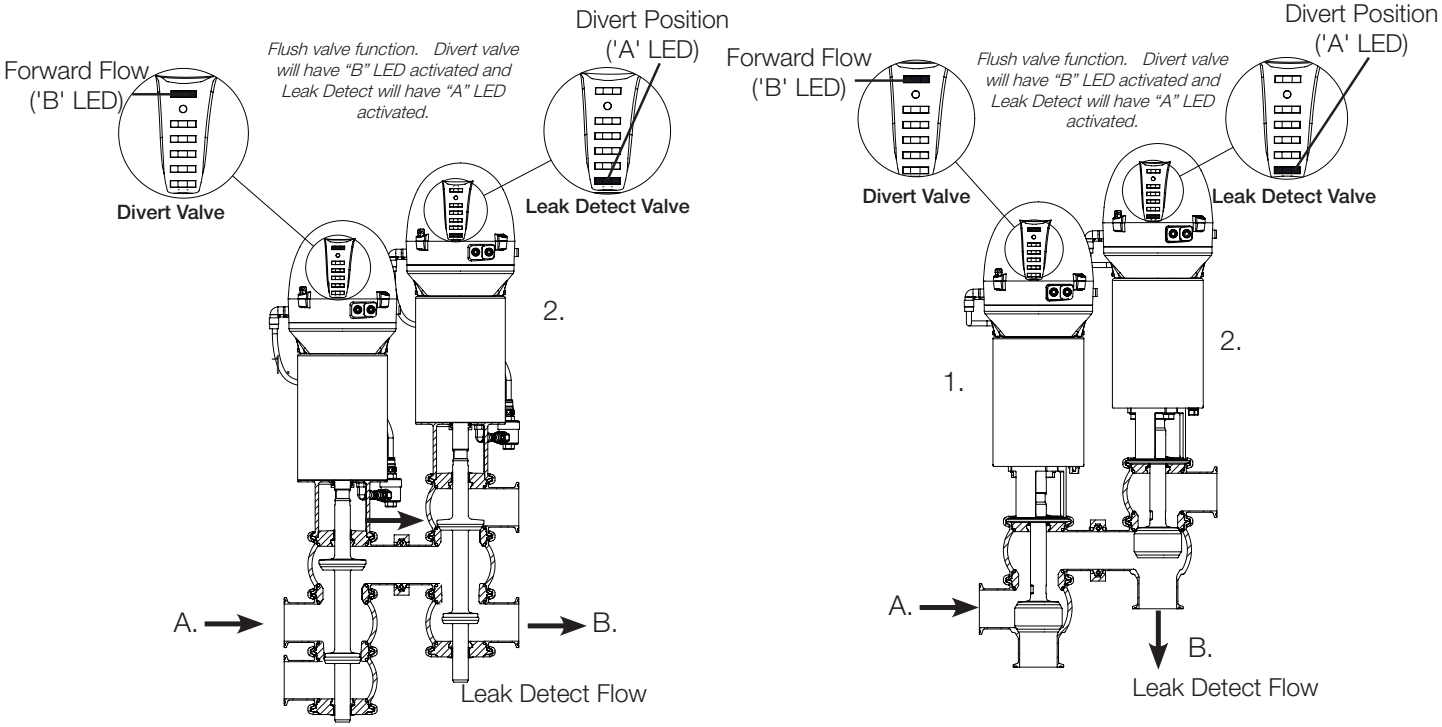

Reverse-Acting **Standard Valve**

1. Divert Valve
2. Leak Detect Valve

A. Product Inlet

B. To Balance Tank

Forward Flow Mode

Forward Flow is the final operating mode of the Flow Diversion Valve. Product flows through both valves to the cooling sections of the pasteurization system.

For the Forward Flow mode to be maintained:

1. The legal set temperature must be maintained.
2. The power supply and air supply must be maintained.
3. Timing pump operating
4. If meter base timing system (MBTS) is maintaining legal flow condition
5. If temperature is above STRL cut in set point

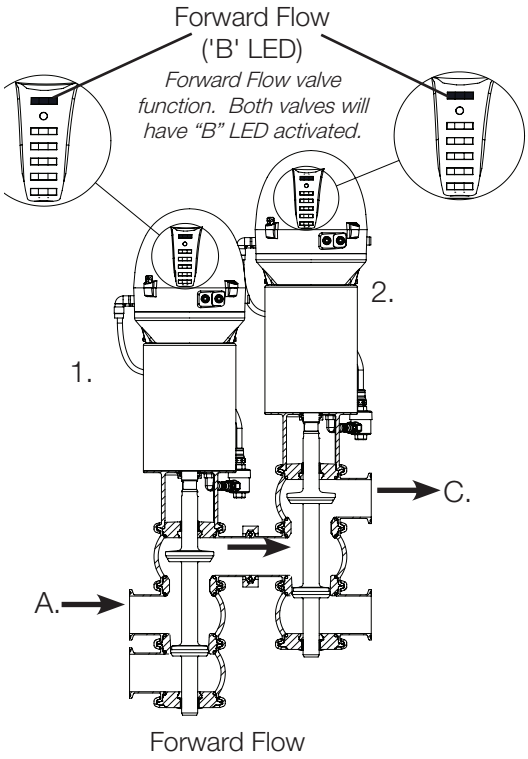

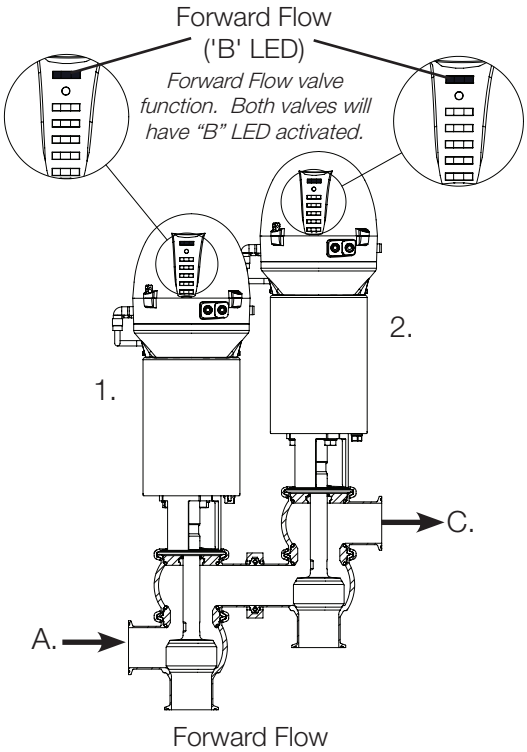

Reverse-Acting

1. Divert Valve
2. Leak Detect Valve

A. Product Inlet

B. Stems Raised

C. Forward Flow

Standard Valve

1. Divert Valve
2. Leak Detect Valve

A. Product Inlet

B. Stems Lowered

C. Forward Flow

ThinkTop Indication Specifications

ThinkTops use micro chip sensor technology which provides a more accurate position sensing than mechanical switches. The micro chips in the sensor, utilizing a principle called the Hall Effect, calculate the position of the indicating target to a very high degree of accuracy. This enables the sensor to detect even the slightest change in stem position.

The ThinkTop provides a sensor band width of 1.5 mm (0.059") accurate to 0.004". In contrast, a micro-switch roller can travel more than 1.6 mm (0.063") without an indication signal change. See Figure A, next page.

Further, the ThinkTop sensor has no moving parts to contacts to wear or break, so there is very little maintenance required.

The ThinkTop also provides visual indication lights to show valve position.

ThinkTop Sensor Adjustment

Break sealing wire on cover. Loosen four (4) screws and remove domed cover. Locate buttons I and II on the side of the sensor. Using the I and II buttons, you will set the valve position sensor to control the timing pump and indication lights. With the valve completely and correctly assembled, you will set and save the proper indication positions for divert and forward flow using the steps below.

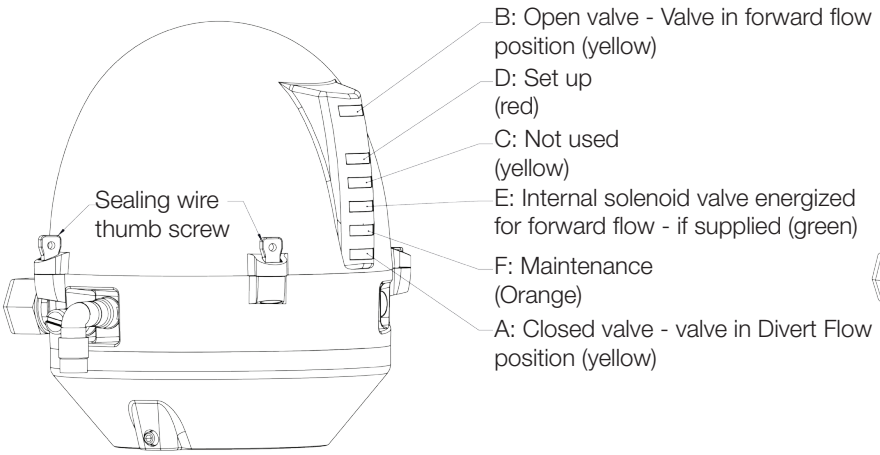

Figure 1

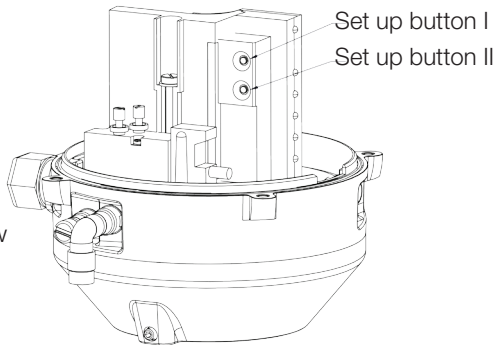

Figure 2

Note: Prior to attempting to program the ThinkTop sensor ensure that the test spacer in inserted in the magnet asembly and that all electrical and air connections have been made.

Push:	I	– and wait until red LED flashes
Push:	I	
Push:	II	– hold for 5 sec - until LED lights flash
Push:	II	(red + yellow LED) Prog 1
Push:	II	(red + yellow + green LED) Prog 2
Push:	II	(red + yellow + green + orange LED) Prog 3
Push:	II	(red + yellow + green + orange + yellow LED) Prog 4
Push:	I	– to approve program 4 setup
Push:	II	– to approve valve in divert position
		Activate solenoid - forward flow position
Push:	II	– to approve valve is in forward flow position
Push:	I	Move to next (no upper seat-lift)
Push:	I	Move to next (no lower seat-lift)
Push:	I	Move to next (no selfadjustment)
Push:	I	Move to next (no maintenance)
Push:	II	red LED flashes (save & exit by push)

Valve Assembly Test and Sealing Instructions

The ThinkTop sensors on these valves are safety devices. They are adjusted so that the timing pump will not run, at sub-legal pasteurization temperatures, unless the valves are completely and properly assembled.

To test the sensor adjustment:

A. Make certain the valves are properly assembled, paying particular attention to the actuator mounting bolts, yoke bonnet and body clamps, and the valve stem to actuator stem connection.

B. Make sure the temperature sensing element of the Safety Thermal Limit Recorder Controller is below legal pasteurization temperature.

C. Momentarily turn on the flow promoting device (timing pump) to make sure it is operating properly, and then turn it off.

D. Break seal wire on ThinkTop cover hold down screws, loosen screws and remove cover.

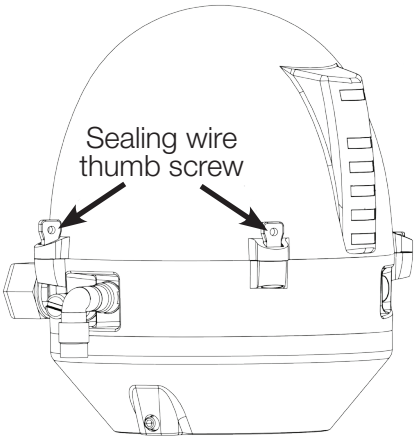

Figure A

E. Test gauge spacer installed at top of magnet. (Figure 1)

F. Push down on outer ring of indication stem magnet and remover spacer between the stem and magnet. (Figure 2)

G. Apply required air to the actuator for normal operating conditions.

H. Turn the selector switch to the “Product” position and the flow promoting device (timing pump) will not start. (Figure 3)

I. Replace the gauge and reassemble the valve. Ensure valve is properly and completely assembled. (Figure 1)

J. Repeat steps D - I with the divert valve.

K. When positive test results are obtained, attach new seal wire Through the hole of the 2 provided thumb screws on ThinkTop cover as noted on Figure A.

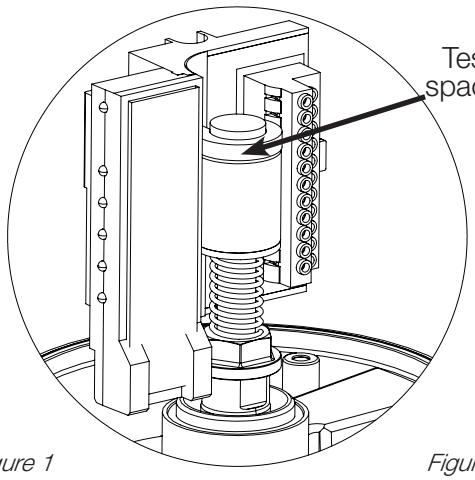

Figure 1

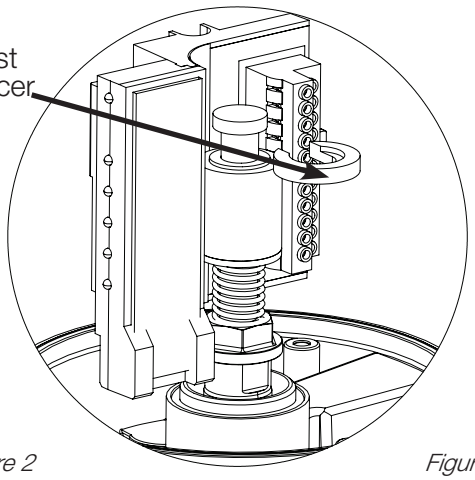

Figure 2

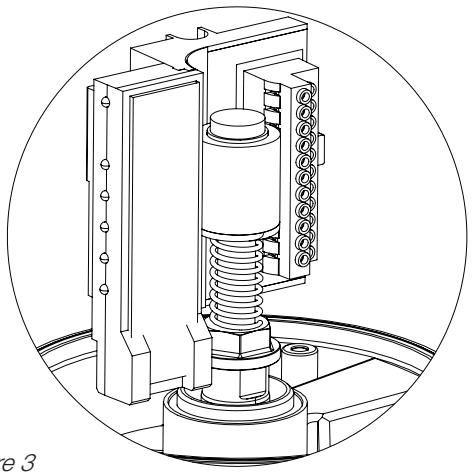

Figure 3

CORRECTIVE ACTION: If the flow promoting device (timing pump) fails to respond as indicated in the above described procedure, an immediate check of the Flow Diversion Valve assembly, ThinkTop adjustment and wiring is required to locate and correct the cause.

Recommended Cleaning

The valve is designed for cleaning in place (CIP). CIP = Cleaning In Place. Study the instructions carefully and pay special attention to the warnings!NaOH = Caustic Soda.
HNO3 = Nitric acid.

Step 1

Always handle lye and acid with great care.

Caustic danger!

Always use rubber gloves!

Always use protective goggles!

Step 2

Never touch the valve or the pipelines when sterilizing.

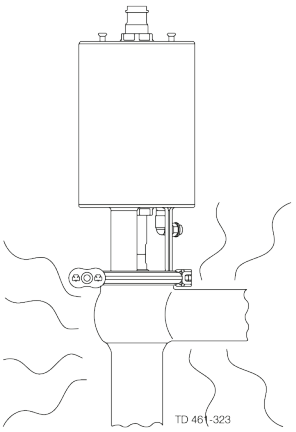

Burning danger!

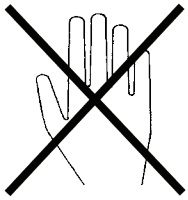

Step 3
Clean the plug and the seats correctly.
Pay special attention to the warnings!
Lift and lower valve plug momentarily!

Change-over valve

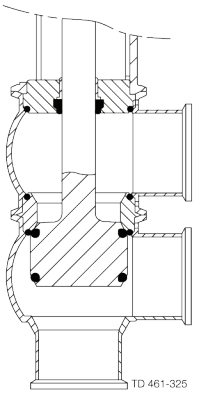

Step 4
Examples of cleaning agents:
Use clean water, free from clorides.

1. 1% by weight NaOH at 158°F

2.2 lb NaOH	+	26.4 gal water	=	Cleaning ag
0.6 gal 33% NaOH	+	26.4 gal water	=	Cleaning ag

2. 0.5% by weight HNO_3 at 158°F

0.2 gal 53% HNO_3	+	26.4 gal water	=	Cleaning ag

Step 5

1. Avoid excessive concentration of the cleaning agent
2. Adjust the cleaning flow to the process
3. **Always** rinse well with clean water after the cleaning.

Always rinse!

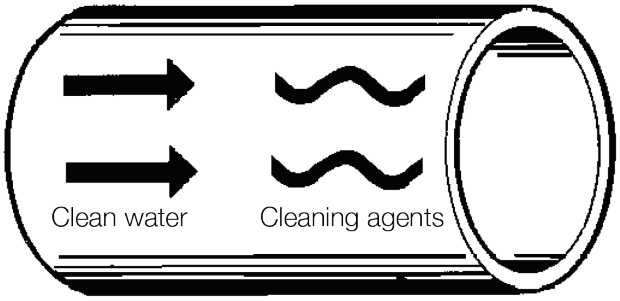

Step 6
NOTE!
The cleaning agents must be stored/disposed of in accordance with current rules/directives.

The Flo-Diversion valve is relatively maintenance free with the exception periodic inspection. As with any precision equipment, however, occasional problems can arise. The troubleshooting chart provides a means of determining and correcting most mechanical and electrical problems.

Note: The troubleshooting chart is divided into two parts, one mechanical and electrical.

Mechanical trouble

Problem	Probable Cause	Remedy
1. Response time above one second.	a. Faulty Quick Exhaust. b. Defective solenoid valve. c. Broken diaphragm on quick exhaust valve.	a. Inspect air lines for leaks or obstructions and take necessary corrective action. b. Test Filter-Regulator and repair or replace if defective. c. Test solenoids. Replace if necessary. d. Replace diaphragm. e. Check for excessive back pressure.
2. Valves will not assume forward flow position at any selection switch setting.	a. Inadequate air supply. b. Capillary tube of pressure-thermo switch in controller is broken or leaking. c. Electrical difficulties.	a. Check air system as described above. b. Replace switch, refer to controller manual. c. Refer to electrical troubleshooting chart and take corrective action.
3. Valve will not assume divert position.	a. Quick exhaust valve is not functioning properly. b. Obstruction in divert or leak detector valve.	a. Inspect quick exhaust valve and remove obstruction or replace valve. b. Disassemble valve and remove obstruction.
4. Timing pump will not start.	a. Timing pump switch is not on. b. One or both valve plug assemblies are not properly connected to actuator stem.	a. Turn on switch. b. Assemble valve stems to actuator stems correctly. c. Check for proper adjustment of ThinkTop.

General Maintenance

Maintain the valve regularly.
Study the instructions carefully and pay special attention to the warnings!Always keep spare rubber seals and lip seals in stock.

Step 1

- **Always** read the technical data thoroughly
- **Always** release the compressed air after use.

Caution!
All scrap must be stored/disposed of in accordance with current rules/directives.

Step 2

- **Never** service the valve when it is hot.
- **Never** service the valve with valve and pipelines under pressure.

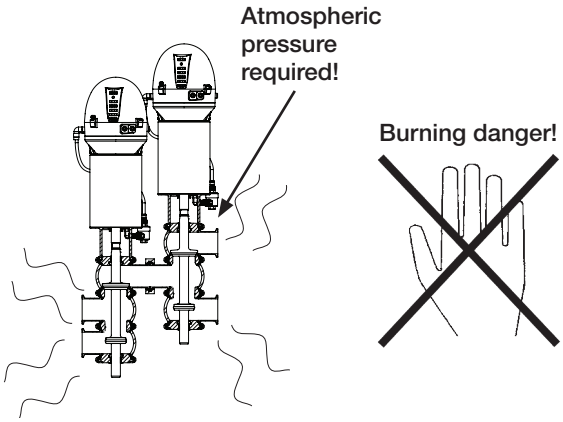

Step 3

Never stick your fingers through the valve ports if the actuator is supplied with compressed air.

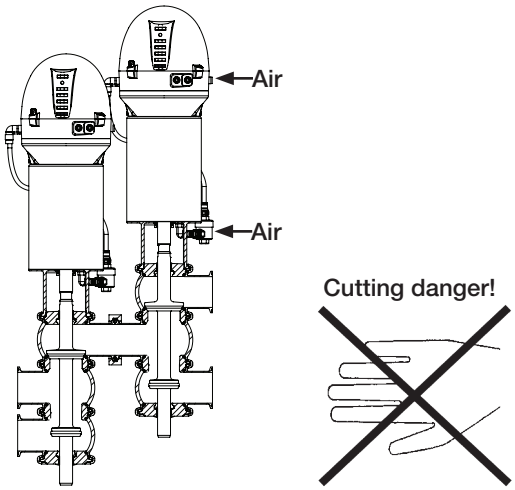

Step 4

Never touch the moving parts if the actuator is supplied with compressed air.

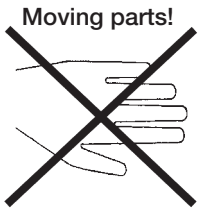

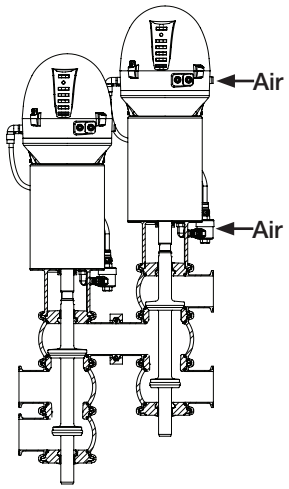

Below are some guidelines for maintenance and lubrication intervals. Please note that the guidelines are for normal working conditions in one shift.

	Product wetted seals	**Actuator bushings complete**
Preventive Maintenance	**Replace after 12 months depending on working conditions**	**Replace after 5 years depending on working conditions**
Maintenance after leakage (leakage normally starts slowing)	**Replace immediately**	**Replace when possible**
Planned maintenance	- Regular inspection for leakage and smooth operation - Keep a record of the value - Use the statistics for planning of inspections **Replace after leakage**	- Regular inspection for leakage and smooth operation - Keep a record of the actuator - Use the statistics for planning of inspections **Replace after leakage**
Lubrication	**Before fitting** USDA H1 approved oil/grease	**Before fitting** Molykote longterm 2 plus

Pre-use check:
1. Supply compressed air to the actuator.
2. Open and close the valve several times to ensure that it operates smoothly.

Pay special attention to the warnings!

Disassembly - Standard Flow Diversion Valve

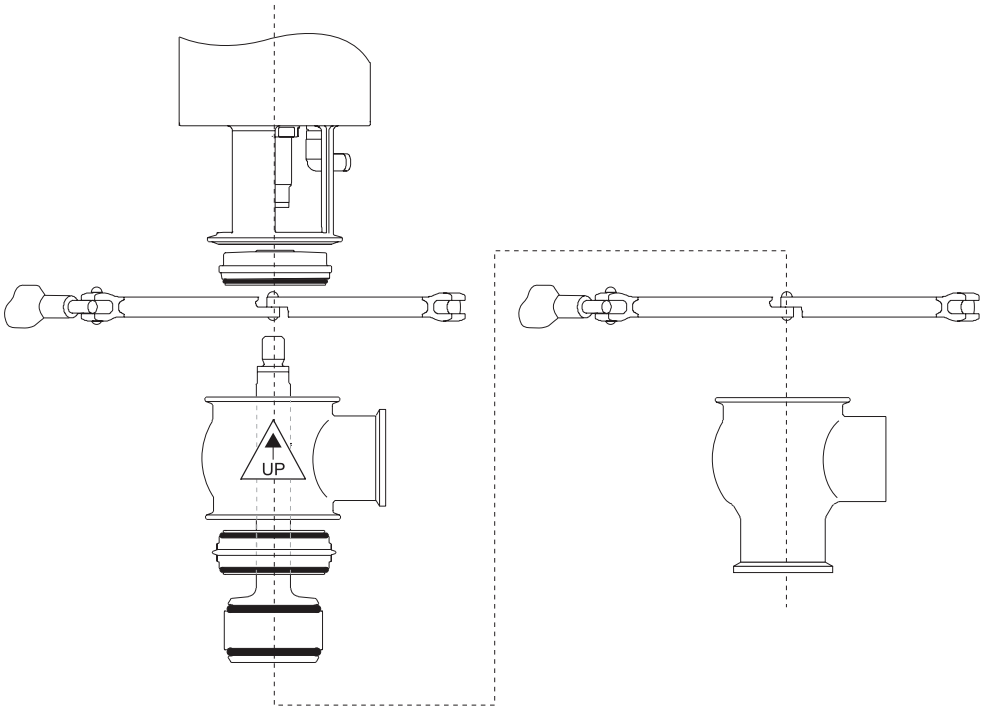

1. Loosen and remove lower clamp - Remove lower body.
2. Supply compressed air to the actuator - **CAUTION - stay clear of moving parts.**
3. Unscrew and remove valve stem/plug.
4. Remove compressed air from actuator - **CAUTION - Stay clear of moving parts.**
5. Loosen and remove upper clamp.
6. Remove upper body.
7. Remove and replace bonnet and seat ring o-rings, bonnet lip seal.
8. Inspect bonnet bushing for wear/damage. Replace if needed - see instructions.
9. Follow instructions for removal of plug seats/seals and replace - see instructions.
10. Reverse order and reassemble valve.

Remember to tighten spindle and plug to a torque of 22 ft lb (used two 17mm wrenches)

Alfa Laval recommends the using of Loctite no. 243.

Disassembly - Reverse-Acting Valve

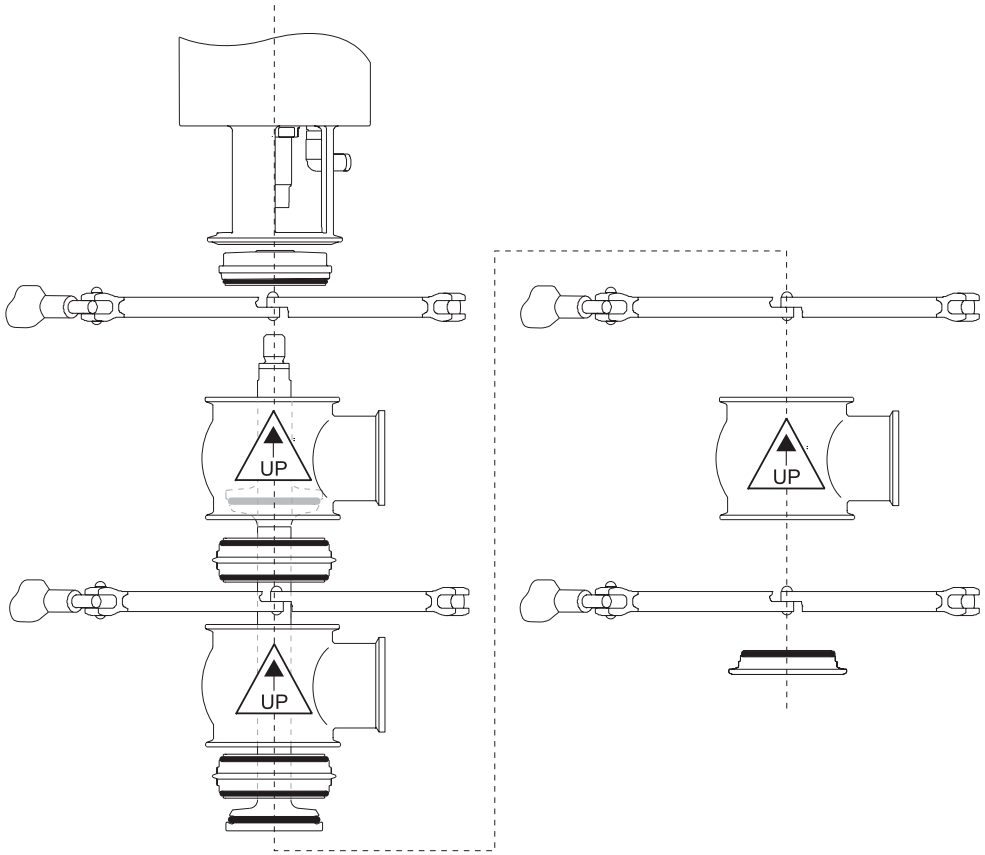

1. Loosen and remove lower clamp between “Lower” and middle body. Remove lower body.
2. Apply compressed air to actuator - CAUTION - Stay clear of moving parts
3. Remove middle clamp and body - Pulling straight down carefully guiding stem through lower seat ring.
4. Loosen and remove upper body clamp.
5. Unscrew valve stem/plug from actuator.
6. Remove compressed air from actuator - CAUTION - Stay clear of moving parts.
7. Remove upper body and bonnet from yoke.
8. Loosen and remove body clamp between middle and lower body - remove seat ring.
9. loosen and remove body clamp - remove lower bonnet.
10. Remove and replace o-rings from upper and lower bonnets.
11. Remove and replace lip seals from upper and lower bonnets.
12. Inspect bonnet bushings for wear and damage, replace as needed - see instructions.
13. Follow instructions for removal and replacement of plug seals - see instructions.
14. Reverse order and reassemble valve.

Remember to tighten spindle and plug to a torque of 22 ft lb (used two 17mm wrenches)

Alfa Laval recommends the using of Loctite no. 243.

Bushing and seat/seal replacement

TR2 and Elastomer seat ring replacement

1. Remove old seal ring using a knife, screwdriver or similar. Be careful not to damage metal parts.
2. Pre-mount plug seal without pressing it into the groove.
3. Squeeze plug seal into the groove using opposite pressure points.
4. Release compressed air behind plug seal.

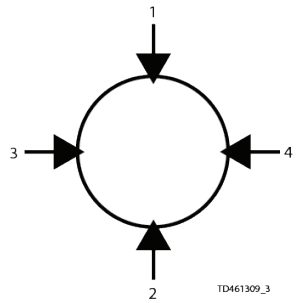

1. Place the plug element on a firm support.
2. Using a utility knife, partially AND CAREFULLY cut through the upper ring Portion of the TR2 plug avoiding contact with stainless steel stem.
3. Force apart both cut ends of the plug for removal from stem.
4. TR2 plugs are installed by applying uniform pressure on all sides. (Pressure can be applied by using the seat assembly tool.)
5. Using a piece of metal and a rubber mallet, place a precise tab to make theTR2 plug snap on to the stem. Reverse the tool and tab again to secure proper fit.
6. Examine seat assembly to be sure the TR2 plug is properly mounted, holding the seat assembly in one hand – rotate the TR2 plug. (For proper CIP cleaning the TR2 plug should turn freely on the stem.)

For more explicit instructions, please refer to the maintenance video.

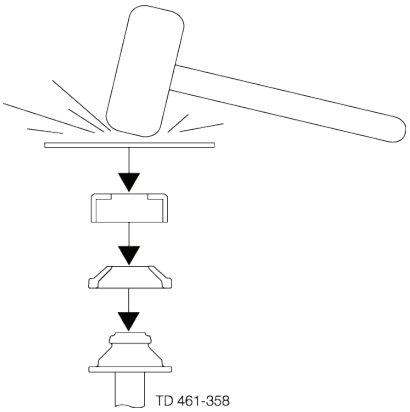

Actuator bushing replacement

1. Unscrew and remove top and bottom bushings with O-rings
2. Lubricate O-rings with Molykote Longterm 2 plus before fitting.
3. Fit bushings and O-rings. Tighten brushing with a torque = 7 lbf-ft (10Nm).

Be careful not to overtighten.

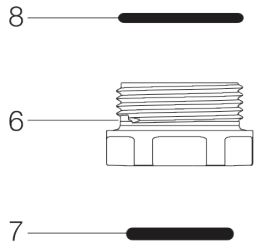

TD 461-310

Dismantling of optional maintainable actuator

1. Rotate cylinder.
2. Remove lock wire and pull away cylinder.
3. Unscrew nuts and remove yoke.
4. The nuts must be tightened again to M = 12 lbf-ft. (17 Nm). Be careful not to over tighten.
5. Unscrew top and bottom bushings.
6. Remove piston with O-ring and spring assembly.
7. Remove O-rings and support disc.

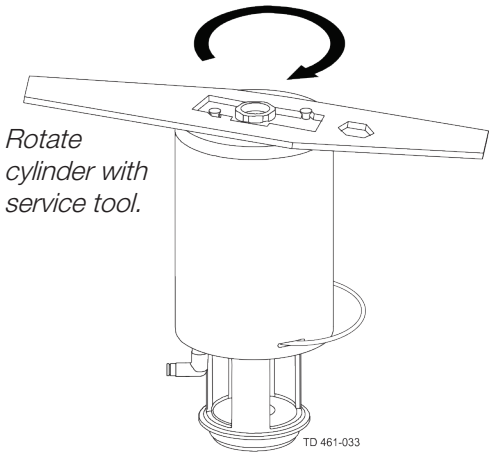

TD 461-033

Assembly of maintainable actuator

Reverse order of 5.6. Dismantling of actuator.
Lubricate O-ring (3, 7, 11) with Molykote Longterm 2 plus before fitting.

Unique 7000 Standard Flow Diversion Valve Exploded View

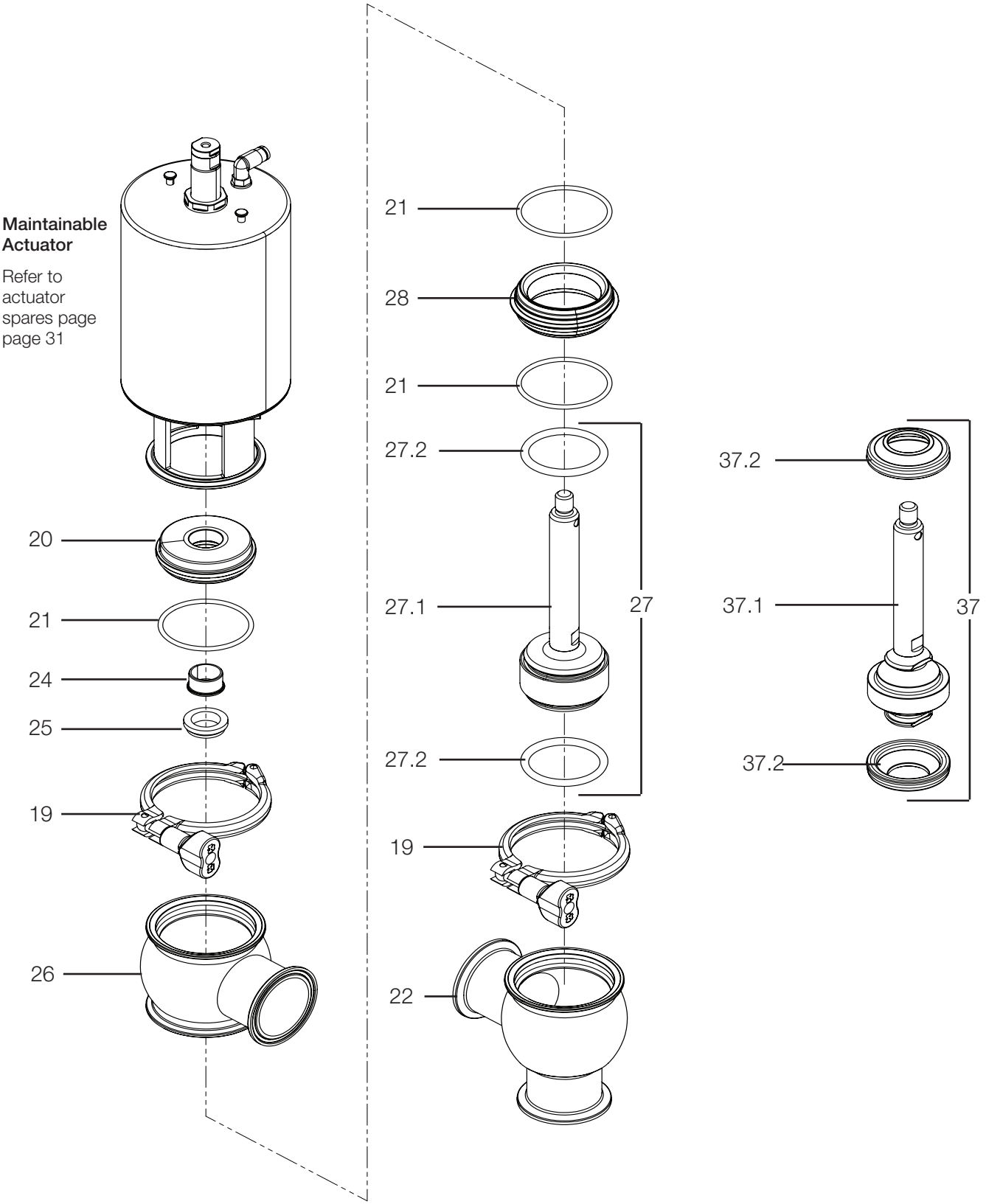

Unique 7000 Standard Flow Diversion Valve Part Numbers

Pos		Qty	Denomination	1-½"	2"	2-½"	3"
Clamp							
19		2	Clamp	9612-9393-16	9612-9393-17	9612-9393-18	9612-9393-19
Bonnet							
20		1	Bonnet	9613-1271-02	9613-1271-03	9613-1271-04	9613-1271-05
21	♦	3	O-ring, EPDM				
		3	O-ring, HNBR				
		3	O-ring, FPM				
			O-ring, set (10 pcs.) EPDM	9614-0594-22	9614-0594-25	9614-0594-28	9614-0594-31
			O-ring, set (10 pcs.) HNBR	9614-0594-23	9614-0594-26	9614-0594-29	9614-0594-32
			O-ring, set (10 pcs.) FPM	9614-0594-24	9614-0594-27	9614-0594-30	9614-0594-33
24		1	Bushing	9613-1250-02	9613-1250-02	9613-1250-02	9613-1250-02
25	♦	2	Lip Seal, EPDM				
		2	Lip Seal, HNBR				
		2	Lip Seal, FPM				
			Lip Seal, set (10 pcs.) EPDM	9614-0594-19	9614-0594-19	9614-0594-19	9614-0594-19
			Lip Seal, set (10 pcs.) HNBR	9614-0594-20	9614-0594-20	9614-0594-20	9614-0594-20
			Lip Seal, set (10 pcs.) FPM	9614-0594-21	9614-0594-21	9614-0594-21	9614-0594-21
Seat							
28		1	Seat, Upper	9613-1275-02	9613-1275-03	9613-1275-04	9613-1275-05
Valve Body							
26		1	Valve body, upper, 1 port, clamp	9634-0955-50	9613-1615-05	9613-1615-07	9613-1615-09
22		1	Valve body, lower, 2 port, clamp	9634-0955-49	9613-1616-05	9613-1616-07	9613-1616-09
Valve Plug - Elastomer (STD)							
27		1	Plug, ISO, complete, EPDM	9613-1277-02	9613-1277-03	9613-1277-04	9613-1277-05
		1	Plug, ISO, complete, HNBR	9613-1277-14	9613-1277-15	9613-1277-16	9613-1277-17
		1	Plug, ISO, complete, FPM	9613-1277-26	9613-1277-27	9613-1277-28	9613-1277-29
27.1		1	Plug, ISO	9613-1400-02	9613-1400-03	9613-1400-04	9613-1400-05
27.2	♦	2	Plug seal, EPDM				
		2	Plug seal, HNBR				
		2	Plug seal, FPM				
			Plug seal, set (10 pcs.) EPDM	9614-0594-04	9614-0594-07	9614-0594-10	9614-0594-13
			Plug seal, set (10 pcs.) HNBR	9614-0594-05	9614-0594-08	9614-0594-11	9614-0594-14
			Plug seal, set (10 pcs.) FPM	9614-0594-06	9614-0594-09	9614-0594-12	9614-0594-15
Valve Plug - TR2 (Optional)							
37		1	Plug, complete	9613-1555-02	9613-1555-03	9613-1555-04	9613-1555-05
37.1		1	Plug	9613-1554-01	9613-1555-02	9613-1554-03	9613-1554-04
37.2	♦	2	Plug seal, PTFE TR-2				
			Plug seal, set (10 pcs.) PTFE TR-2	9614-0594-49	9614-0594-50	9614-0594-51	9614-0594-52

		1-½"	2"	2-½"	3"
Product wetted parts service kit					
♦	**Service Kit, EPDM**	**9611-92-6580**	**9611-92-6581**	**9611-92-6582**	**9611-92-6583**
♦	**Service Kit, HNBR**	**9611-92-6586**	**9611-92-6587**	**9611-92-6588**	**9611-92-6590**
♦	**Service Kit, FPM**	**9611-92-6592**	**9611-92-6593**	**9611-92-6594**	**9611-92-6595**
♦	**Service Kit, TR2 w/ EPDM**	**9611-92-6633**	**9611-92-6634**	**9611-92-6635**	**9611-92-6636**
♦	**Service Kit, TR2 w/ HNBR**	**9611-92-6638**	**9611-92-6639**	**9611-92-6640**	**9611-92-6641**
♦	**Service Kit, TR2 w/ FPM**	**9611-92-6643**	**9611-92-6644**	**9611-92-6645**	**9611-92-6646**

Reverse-Acting Valve Spares Exploded View

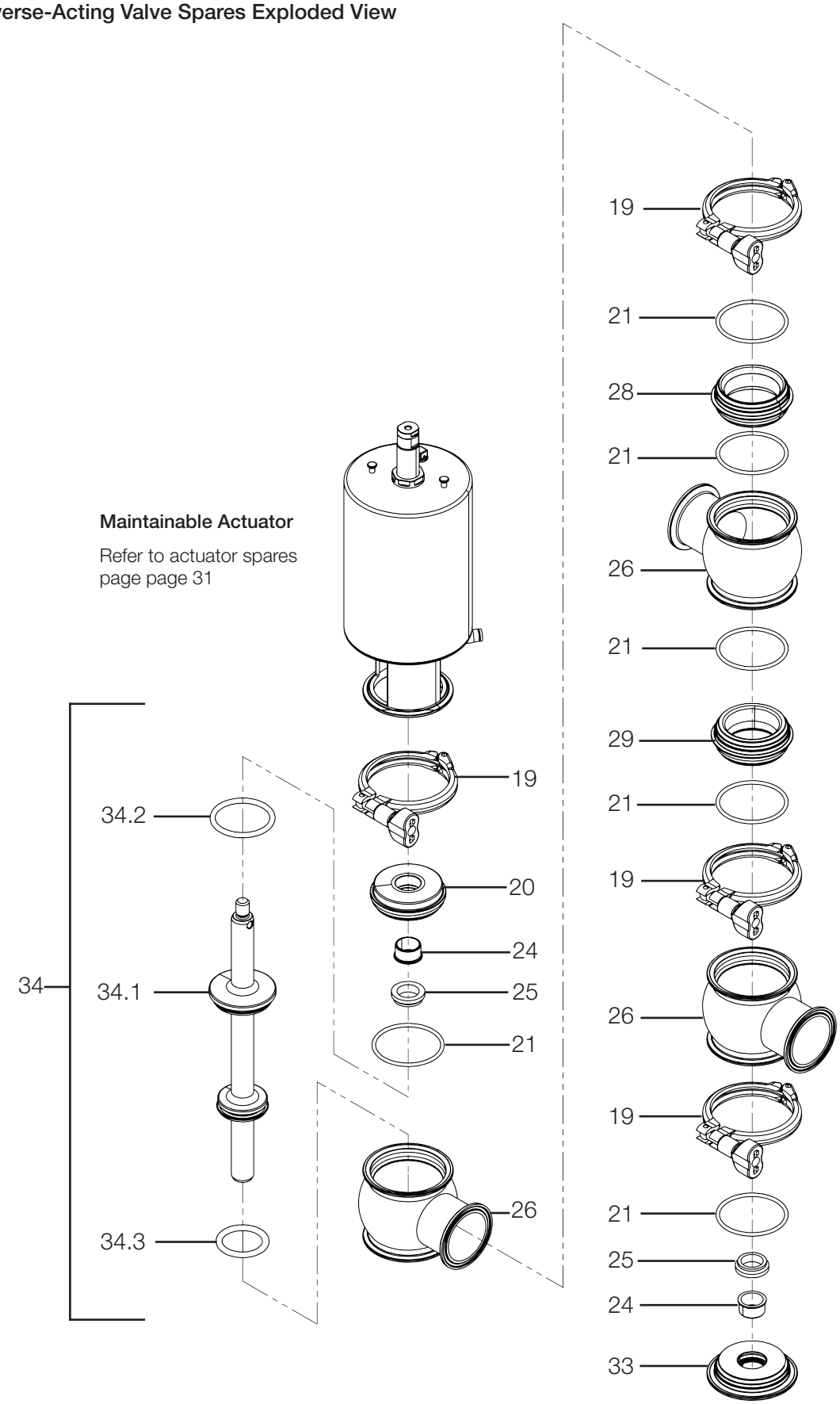

Reverse-Acting Valve Spare Part Numbers

Pos		Qty	Denomination	2"	2-½"	3"	4"
Clamp							
19		4	Clamp	9612-9393-17	9612-9393-18	9612-9393-19	9612-9393-20
Bonnet							
20		1	Upper Bonnet	9613-1271-03	9613-1271-04	9613-1271-05	9613-1271-06
21	♦	6	O-ring, EPDM				
		6	O-ring, HNBR				
		6	O-ring, FPM				
			O-ring, set (10 pcs.) EPDM	9614-0594-25	9614-0594-28	9614-0594-31	9614-0594-34
			O-ring, set (10 pcs.) HNBR	9614-0594-26	9614-0594-29	9614-0594-32	9614-0594-35
			O-ring, set (10 pcs.) FPM	9614-0594-27	9614-0594-30	9614-0594-33	9614-0594-36
24		2	Bushing	9613-1250-02	9613-1250-02	9613-1250-02	9613-1250-02
25	♦	2	Lip Seal, EPDM				
		2	Lip Seal, HNBR				
		2	Lip Seal, FPM				
			Lip Seal, set (10 pcs.) EPDM	9614-0594-19	9614-0594-19	9614-0594-19	9614-0594-19
			Lip Seal, set (10 pcs.) HNBR	9614-0594-20	9614-0594-20	9614-0594-20	9614-0594-20
			Lip Seal, set (10 pcs.) FPM	9614-0594-21	9614-0594-21	9614-0594-21	9614-0594-21
33		1	Lower Bonnet	9634-0921-01	9634-0921-02	9634-0921-03	9634-0921-04
Seat							
28		1	Seat, Upper	9613-1275-03	9613-1275-04	9613-1275-05	9613-1275-06
29		1	Seat, Lower	9634-0920-01	9634-0920-02	9634-0920-03	9634-0920-04
Valve Body							
26		3	Valve body, upper, 1 port, clamp	9613-1615-05	9613-1615-07	9613-1615-09	9613-1615-11
		3	Valve body - tangential, upper, 1 port, clamp	9613-1690-02	9613-1690-04	9613-1690-06	9613-1690-08
Valve Plug							
34		1	Plug, RA-FDV, complete, EPDM	9614-2587-01	9614-2587-02	9614-2587-03	9614-2587-04
		1	Plug, RA-FDV, complete, HNBR	9614-2587-05	9614-2587-06	9614-2587-07	9614-2587-08
		1	Plug, RA-FDV, complete, FPM	9614-2587-09	9614-2587-10	9614-2587-11	9614-2587-12
34.1		1	Plug, RA-FDV	9634-0911-01	9634-0911-02	9634-0911-03	9634-0911-04
34.2	♦	1	Plug seal, Upper, EPDM				
		1	Plug seal, Upper, HNBR				
		1	Plug seal, Upper, FPM				
			Plug seal, Upper, set (10 pcs.) EPDM	9614-0594-07	9614-0594-10	9614-0594-13	9614-0594-16
			Plug seal, Upper, set (10 pcs.) HNBR	9614-0594-08	9614-0594-11	9614-0594-14	9614-0594-17
			Plug seal, Upper, set (10 pcs.) FPM	9614-0594-09	9614-0594-12	9614-0594-15	9614-0594-18
34.3	♦	1	Plug seal, Lower, EPDM				
		1	Plug seal, Lower, HNBR				
		1	Plug seal, Lower, FPM				
			Plug seal, Lower, set (10 pcs.) EPDM	9614-0594-04	9614-0594-07	9614-0594-10	9614-0594-13
			Plug seal, Lower, set (10 pcs.) HNBR	9614-0594-05	9614-0594-08	9614-0594-11	9614-0594-14
			Plug seal, Lower, set (10 pcs.) FPM	9614-0594-06	9614-0594-09	9614-0594-12	9614-0594-15

Product Wetted Parts - order the below position numbers in 10 pcs. sets, according to valve size and elastomer type as listed above

21 ♦ ..... O-ring, 10 pcs. set
25 ♦ ..... Lip Seal, 10 pcs. set
34.2 ♦ ..... Plug seal, Upper, 10 pcs. set
34.3 ♦ ..... Plug seal, Lower, 10 pcs. set

Failed Closed Actuator for Reverse Acting
Exploded View

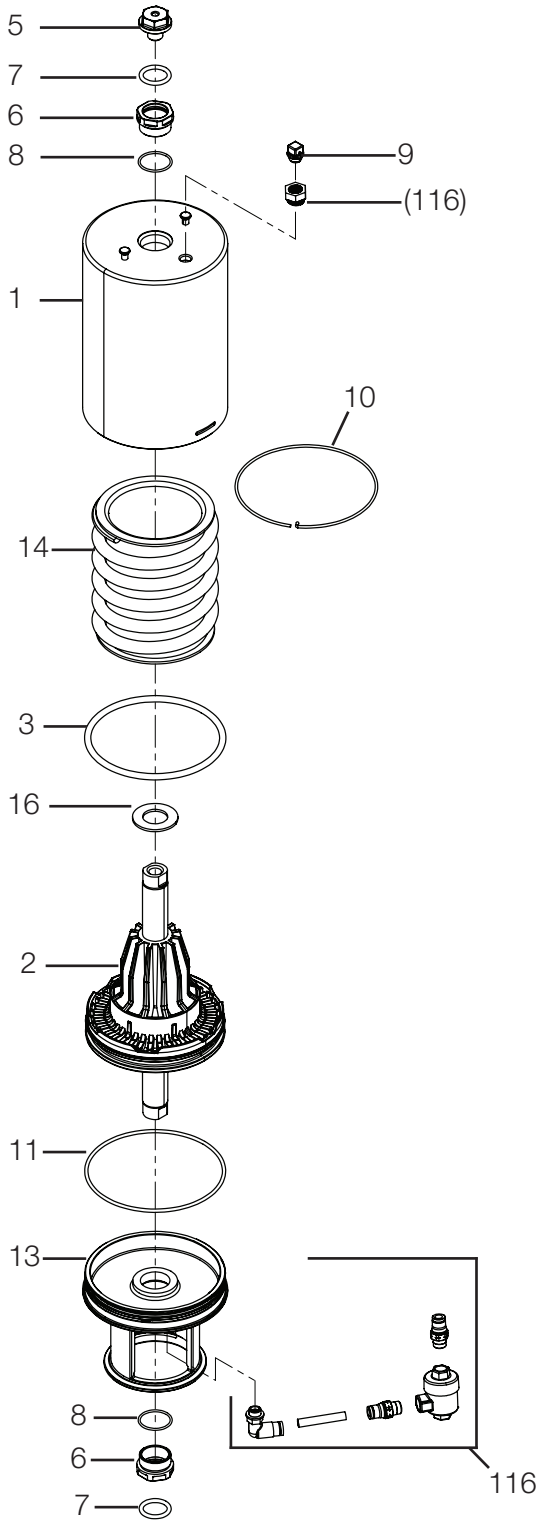

Failed Open Actuator for Standard
Exploded View

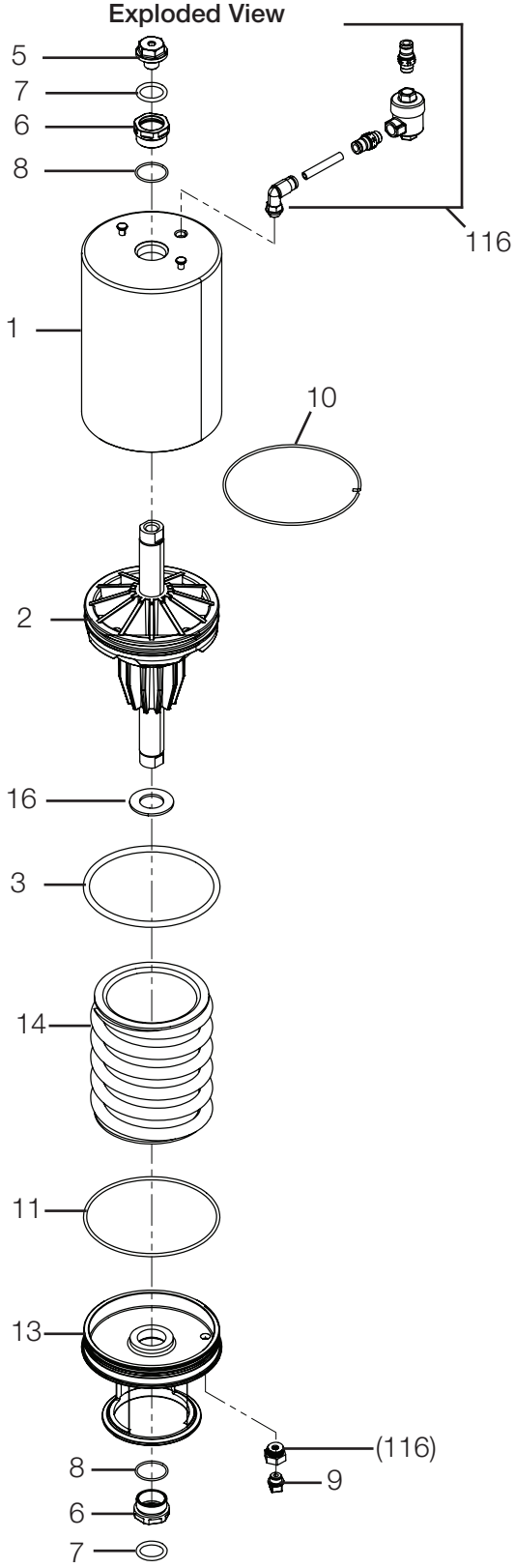

Unique 7000 Maintainable Actuator - Flow Diversion Valve Part Numbers

Pos		Qty	Denomination	1-½"	2"	2-½"	3"	4"
Actuator								
			Actuator, - complete (NC)	NA	9634-0938-01	9634-0938-02	9634-0938-03	9634-0938-04
			Actuator, - complete (NO)	9634-0938-05	9634-0938-06	9634-0938-07	9634-0938-08	NA
1		1	Cylinder, (polished)	9615-2204-04	9615-2204-05	9615-2204-05	9615-2204-06	9615-2204-06
2		1	Piston	9613-1322-01	9613-1323-01	9613-1323-01	9613-1324-01	9613-1324-01
3	♦	1	O-ring					
5		1	Adapter, steel	9614-0653-01	9614-0653-01	9614-0653-01	9614-0653-01	9614-0653-01
6	♦	2	Bushing					
7	♦	2	O-ring					
8	♦	2	O-ring					
9		1	Plug	9613-4141-01	9613-4141-01	9613-4141-01	9613-4141-01	9613-4141-01
10		1	Lock wire	9613-1432-01	9613-1432-02	9613-1432-02	9613-1432-03	9613-1432-03
11	♦	1	O-ring					
116		1	Kit, Quick Exhaust	9615-2282-01	9615-2282-01	9615-2282-01	9615-2282-01	9615-2282-01
14		1	Spring assembly	9613-1325-01	9613-1325-02	9613-1325-02	9613-1325-03	9613-1325-03
15		1	Bottom	9615-2205-01	9615-2205-02	9615-2205-02	9615-2205-03	9615-2205-03
16	♦	1	Support disc					
Yoke								
13		1	Yoke	9613-1543-01	9613-1544-02	9613-1545-02	9613-1546-03	9613-1547-03

Service Kit for Actuator		1-½"	2"	2-½"	3"	4"
♦	Service kit, NO , NC	9611-92-6497	9611-92-6498	9611-92-6498	9611-92-6499	9611-92-6499

ThinkTop Exploded View

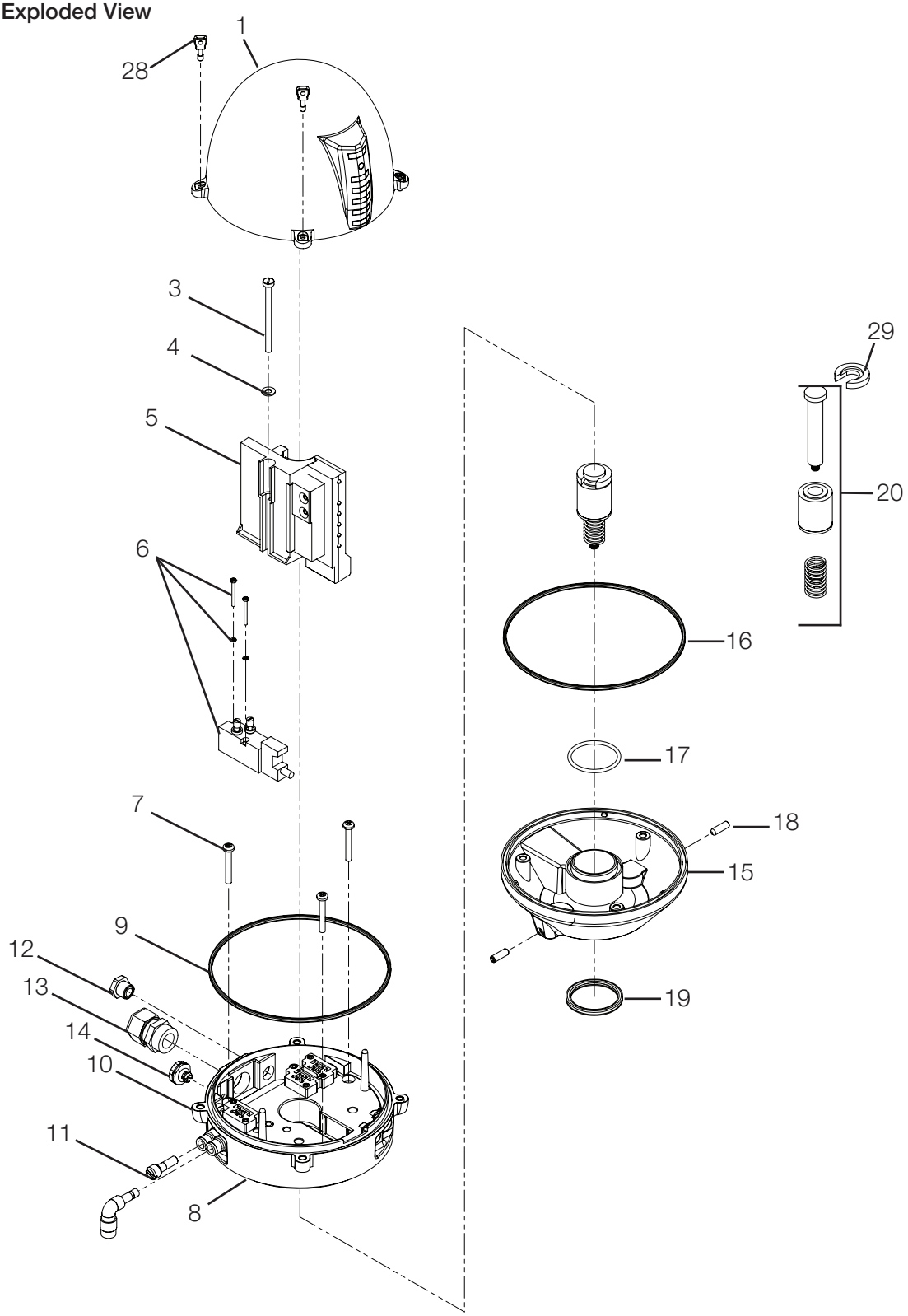

ThinkTop for 7000 FDV. Digital top with or without (1) solenoid. Standard parts except for special magnet assembly. Magnet assembly allows insert of "test gauge" to change setting position. Also, eyelet cover screws allows (position 2) the addition of seal wire to secure top and to be added by inspector.

ThinkTop Part Numbers

Pos	Qty	Denomination	Description
		ThinkTop Complete, 0SOL Digital 24VDC	9634-0939-01
		ThinkTop Complete, 1SOL Digital 24VDC	9634-0939-02
1	1	Shell complete	9613-4279-01
28	2	Tamper proof screw	9634-0910-01
3	1	Screw	9611-9934-58
4	1	Washer	9611-9934-59
5	1	Sensor board, Digital 8-30 VDC PNP/NPN	9613-4434-01
6	1	Solenoid valve, 3/2, 24 VDC	9611-9933-24
7	3	PT screw	9611-9934-57
8	1	Base, complete, no solenoids (Pos. 9, 12,13, 14 included)	9613-4282-01
	1	Base, complete, 3/3 24 VDC, one solenoid (Pos. 9, 10, 11, 12,13, 14 included)	9613-4282-02
9	1	Special X-ring, grey	9613-4564-01
10	1	Air fitting, elbow, metal plug with grey rim: Ø6 mm / 1/4"	9611-9956-79
11	1	Blow-off valve	9612-5636-01
12	1	Thread plug, PG7 Ø3-Ø6.5 mm	9611-9934-07
13	1	Cable gland, PG11 Ø4-Ø10 mm	9611-9935-17
14	1	Gore vent High airflow	9611-9947-22
15	1	Adapter complete	9612-5621-01
16	1	Special X-ring	9612-9994-01
17	1	O-ring	9611-9933-50
18	2	Allen screw	9611-9934-09
19	1	Special X-ring	9612-5696-01
20	1	Indicator pin, complete	9615-2281-01
29	1	Test washer	9634-0928-02

How to contact Alfa Laval
Contact details for all countries are
continually updated on our website.
Please visit www.alfalaval.us to access the information directly.